100 LB CAPACITY SC100

# HARDMOUNT WASHER-EXTRACTOR

## Hardmount Washer-Extractors

Our heavy-duty construction provides reliable operation and guarantees your washer-extractor will be in service for years to come. That's why our bearings are protected against moisture with dual triple-lip seals and a stainless sleeve around the trunnion. That's why our large door design makes loading and unloading easy, while our improved door locking mechanism is designed to withstand the rigors of commercial use.

- Self cleaning four-compartment dispenser automatically dispenses detergent and fabric softener at appropriate times in the wash cycle.
- Our heavy-duty construction provides reliable operation for years to come.
- Industry-leading flexible water level settings will help you save on utilities.
- Durable stainless steel front and top.
- Quantum® gives you complete laundry control to reduce costs and increase throughput.

### Quantum® Gold

Quantum® Gold offers a total of 30 programmable cycles as well as 30 programmable water levels that enable you to adjust water use in every cycle step. The infrared programming and audit data retrieval save time, as do advanced diagnostics. Quantum Gold machines feature a maximum extraction speed of 200 G-force. Quantum Gold is designed to help you reduce costs, decrease your downtime and increase your throughput.

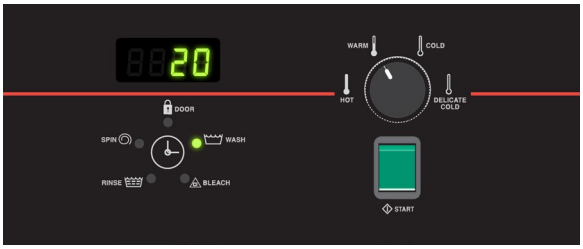


### Quantum® Standard

For laundry managers requiring basic management options, Quantum Standard comes with four cycle selections, two water levels and manual programming. It also offers a maximum extraction speed of 100 G-Force.

Speed Queen

SPECIFICATIONS

# HARDMOUNT WASHER-EXTRACTOR

| MODEL | | | **SC100** |
|---|---|---|---|
| CONTROL OPTION | | | Quantum Gold, Quantum Standard |
| CAPACITY - lb (kg) | | | 100 (45) |
| OVERALL WIDTH - in (mm) | | | 41 1/2 (1054) |
| *OVERALL DEPTH - in (mm) | | | 52 1/2 (1336) |
| OVERALL HEIGHT - in (mm) | | | 56 3/16 (1426) |
| CYLINDER DIAMETER - in (mm) | | | 36 (916) |
| CYLINDER DEPTH - in (mm) | | | 26 (610) |
| CYLINDER VOLUME - cu. ft. (liters) | | | 13.5 (434) |
| DOOR OPENING SIZE - in (mm) | | | 18 1/2 (470) |
| DOOR BOTTOM TO FLOOR - in (mm) | | | 17 15/16 (455) |
| WATER INLET CONNECTION - in (mm) | | | 2 x 3/4 (19) |
| DRAIN DIAMETER - in (mm) | | | 1 x 3 (76) |
| DRAIN HEIGHT TO FLOOR - in (mm) | | | 5 3/4 (145) |
| MOTOR POWER CONSUMPTION - hp (kw) | | | 5 (3.7) |
| TOTAL # OF SPEEDS | | | 6, 9 |
| CYLINDER SPEEDS - RPM (G-FORCE) | | Gentle | 28 (0.4) |
| | | Wash | 39 (.8) |
| | | Distribution | 70 (2.5) |
| | | Very Low | 230 (27) |
| | | Low | 396 (80) |
| | | Medium | 443 (100) |
| | | ** High | 495 (120) |
| | | **Very High | 542 (150) |
| | | **Ultra High | 568 (165 |
| *** VOLTAGE/ CIRCUIT BREAKER - FLA | X | 200-208/220-240/50/60/1/3 | 20-16 (1 Ph) 15-10 (3 Ph) |
| | Q | 200-208/220-240/50/60/3 | 15-10 |
| | N | 440-480/50/60/3 | 15-7 |
| | P | 380-415/50/60/3 | 15-7 |
| SHIPPING DIMENSIONS APPROX. - in (mm) | | Width | 44 (1118) |
| | | Depth | 58 1/2 (1486) |
| | | Height | 58 5/8 (1488) |
| NET WEIGHT - lb (kg) | | | 1260 (572) |
| SHIPPING WEIGHT - lb (kg) | | | 1310 (594) |
| SLAT CRATE SHIPPING WEIGHT - lb (kg) | | | 1435 (651) |
| ****AGENCY APPROVALS | | | $_{c}$ETL$_{us}$ |

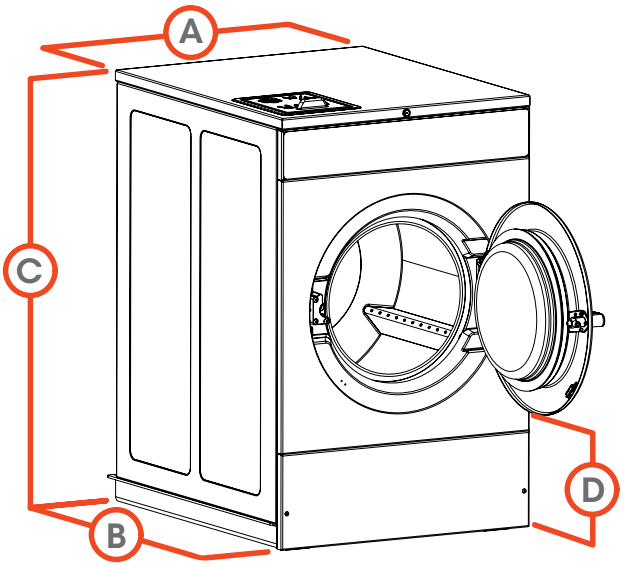


| | | |
|---|---|---|
| A. | OVERALL WIDTH - in (mm) | 41 1/2 (1054) |
| B. | *OVERALL DEPTH - in (mm) | 52 1/2 (1336) |
| C. | OVERALL HEIGHT - in (mm) | 56 3/16 (1426) |
| D. | DOOR BOTTOM TO FLOOR - in (mm) | 17 15/16 (455) |

*Overall depth includes vacuum breaker to door handle.

**High, Very High, and Ultra High Spin Speeds are available on the Quantum Gold models only.

***Circuit breaker and amp draw data shown are for models without electric heat. Consult factory for other configurations. Manufacturer strongly recommends using a circuit breaker instead of fuses. Use 3-pole circuit breakers for 3-phase machines.

****Agency approvals may vary depending on configuration. Consult factory for details. Steam connection requires 1/2" N.P.P.

For the most accurate information, the installation guide should be used for all design and construction purposes. Due to continuous product improvements, design and specifications subject to change without notice. The quality management system of Alliance Laundry Systems' Ripon facility has been registered to ISO 9001:2008.

©2017 Alliance Laundry Systems LLC AO17-0007