55 LB CAPACITY SY55

SOFTMOUNT WASHER-EXTRACTOR

Softmount Washer-Extractors

The powerful operation of a washer-extractor often requires that the machine be bolted to the floor. Softmount washer-extractors offer an alternative for specialized applications, such as second floors, where hardmount units aren't an option. The heavy duty suspension absorbs vibrations without the need for special foundations. The inverter drive system delivers low energy use, high extraction speed, lower noise and fewer imbalances. Softmount washer-extractors offer an attractive, sleek, modern design with a slanted control panel for ease of operation.

- High G-Force extraction reduces drying times.
- Inverter drive handles a wide variety of fabric types.
- Stainless steel construction increases strength and durability.
- Upfront soap box for ease of use.
- Large door opening for easy loading.

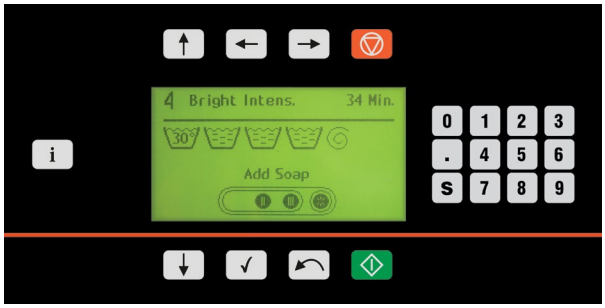

QED Select

QED Select control comes with 99 preset programs. Multilingual, versatile and easy to use, the customizable wash programs help managers tailor their wash process for specific loads and linen types. Users can easily follow the status of every phase of the wash cycle and modify data and parameters at any time to monitor for maximum efficiency. The result? Your laundry receives the best possible care because operators have the utmost cycle control.

SPECIFICATIONS

SOFTMOUNT WASHER-EXTRACTOR

MODEL		**SY55**
CONTROL OPTION		QED Select
CAPACITY - lb (kg)		55 (24)
OVERALL WIDTH - in (mm)		38 3/16 (970)
OVERALL DEPTH - in (mm)		43 1/2 (1105)
OVERALL HEIGHT - in (mm)		55 1/2 (1410)
CYLINDER DIAMETER - in (mm)		29 1/2 (750)
CYLINDER DEPTH - in (mm)		21 1/2 (545)
CYLINDER VOLUME - cu. ft. (liters)		8.5 (240)
DOOR OPENING SIZE - in (mm)		18 1/8 (460)
DOOR BOTTOM TO FLOOR - in (mm)		18 3/4 (477)
WASH SPEED - RPM		42
EXTRACT SPEED - RPM		980
EXTRACT G-FORCE		400
WATER INLET CONNECTION - in (mm)		2 x 3/4 (19)
STEAM INLET CONNECTION - in (mm)		1/2 (13)
DRAIN DIAMETER - in (mm)		3 (76)
MOTOR POWER CONSUMPTION - hp (kw)		4.02 (3.00)
VOLTAGE/ CIRCUIT BREAKER - FLA *	200-240/50-60/1/3**	20-15 (1 Ph) 20-15 (3 Ph)
	440-480/50-60/3	10-7.1
SHIPPING DIMENSIONS APPROX. - in (mm)	Width	40 3/8 (1025)
	Depth	45 1/4 (1150)
	Height	61 (1550)
NET WEIGHT - lb (kg)		948 (430)
SHIPPING WEIGHT - lb (kg)		992 (450)
AGENCY APPROVALS		CSA

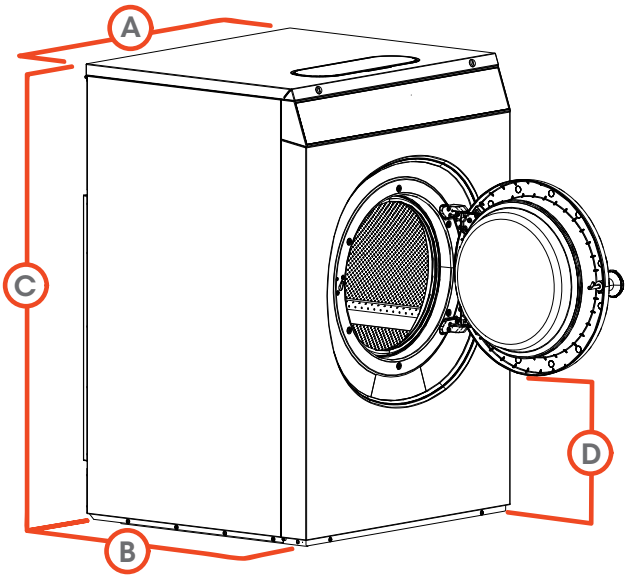

A.	OVERALL WIDTH - in (mm)	38 3/16 (970)
B.	OVERALL DEPTH - in (mm)	43 1/2 (1105)
C.	OVERALL HEIGHT - in (mm)	55 1/2 (1410)
D.	DOOR BOTTOM TO FLOOR - in (mm)	18 3/4 (477)

* Circuit breaker and amp draw data shown are for models without electric heat. Consult factory for other configurations. Manufacturing strongly recommends using a circuit breaker instead of fuses.

** Operates on single or three phase systems as single phase

For the most accurate information, the installation guide should be used for all design and construction purposes. Due to continuous product improvements, design and specifications subject to change without notice. The quality management system of Alliance Laundry Systems' Ripon facility has been registered to ISO 9001:2008.

©2017 Alliance Laundry Systems LLC AO17-0023