Huebsch®
YOUR SMART LAUNDRY PARTNER

On-Premises **60-lb** **Hardmount Washer-Extractor**

Maximized throughput, minimized costs. That's what busy on-premises laundries demand. Huebsch® hardmount washer-extractors deliver those results, while producing exceptional finished wash quality. In addition, their durability ensures the machines will be consistent laundry performers for years to come.

Strength

Our computer-optimized, heavy-duty frame is lighter, lasts longer, balances loads more efficiently, and reduces sound and vibration levels. Huebsch washer-extractors also boast two triple-lip seals and an excluder-face seal for seven layers of bearing protection.

Power

Proprietary inverter-drive technology provides smooth, reliable power, saving you 33% on electricity while maximizing cleaning power. Our inverter also exerts 200 G-Force extraction to remove more moisture from loads and reduce drying time.

Performance

Available in a variety of capacities, including 20 lb, 30 lb, 40 lb, 60 lb, 80 lb and 100 lb capacities, Huebsch cabinet hardmount washer-extractors also offer a variety of control options to match your operation's unique requirements.

Galaxy™ 400 with eBoost™

Customize your washing power with the ability to choose between three water levels while eliminating wasted water with advanced leak detection. PC programming, audit data retrieval and advanced diagnostics save time, while 200 G-Force extraction speeds reduce drying time and utility consumption.

Galaxy 200

For laundry managers requiring basic management options, Galaxy 200 offers a 100 G-Force extraction speed, four cycle selections, two water levels and manual programming.

On-Premises **60-lb Hardmount Washer-Extractor** Specifications

MODEL			HC060
CONTROL OPTION			Galaxy 400 Galaxy 200
CAPACITY - lb (kg)			60 (27)
OVERALL WIDTH - in (mm)			34 1/16 (865)
*OVERALL DEPTH - in (mm)			42 9/16 (1081)
OVERALL HEIGHT - in (mm)			49 7/8 (1267)
CYLINDER DIAMETER - in (mm)			30 (762)
CYLINDER DEPTH - in (mm)			22 (559)
CYLINDER VOLUME - cu. ft. (liters)			9.0 (255)
DOOR OPENING SIZE - in (mm)			16 1/4 (413)
DOOR BOTTOM TO FLOOR - in (mm)			14 15/16 (379)
WATER INLET CONNECTION - in (mm)			2 x 3/4 (19)
DRAIN DIAMETER - in (mm)			1 x 3 (76)
DRAIN HEIGHT TO FLOOR - in (mm)			4 11/16 (119)
MOTOR POWER CONSUMPTION - hp (kw)			3 (2.2)
TOTAL # OF SPEEDS			6, 9
CYLINDER SPEEDS - RPM (G-FORCE)		Gentle	31 (0.4)
		Wash	43 (.8)
		Distribution	77 (2.5)
		Very Low	252 (27)
		Low	434 (80)
		Medium	485 (100)
		** High	542 (120)
		**Very High	594 (150)
		**Ultra High	686 (200)
*** VOLTAGE/ CIRCUIT BREAKER - FLA	X	200-208/220-240/50/60/1/3	15-10 (1 Ph) 15-6 (3 Ph)
	Q	200-208/220-240/50/60/3	15-6
	N	440-480/50/60/3	15-4
	P	380-415/50/60/3	15-4
SHIPPING DIMENSIONS APPROX. - in (mm)		Width	37 1/2 (953)
		Depth	46 15/16 (1191)
		Height	56 5/16 (1430)
NET WEIGHT - lb (kg)			695 (315)
SHIPPING WEIGHT - lb (kg)			745 (338)
SLAT CRATE SHIPPING WEIGHT - lb (kg)			860 (390)
****AGENCY APPROVALS			$_{c}$ETL$_{us}$, CE

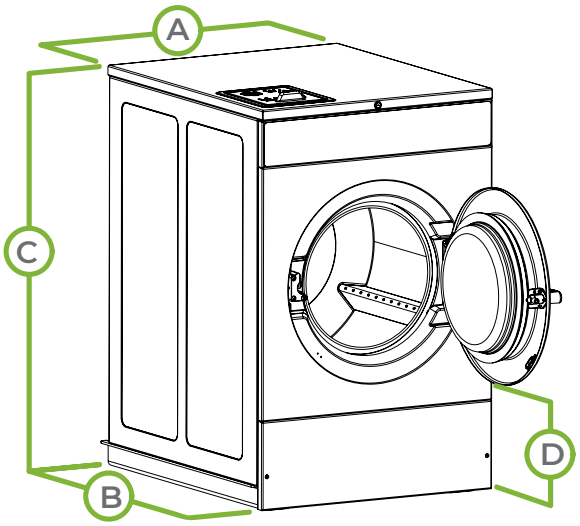

MODEL		HC060
A.	OVERALL WIDTH - in (mm)	34 1/16 (865)
B.	*OVERALL DEPTH - in (mm)	42 9/16 (1081)
C.	OVERALL HEIGHT - in (mm)	49 7/8 (1267)
D.	DOOR BOTTOM TO FLOOR - in (mm)	14 15/16 (379)

*Overall depth includes vacuum breaker to door handle.

**High, Very High, and Ultra High Spin Speeds are available on the Galaxy 400 models only.

***Circuit breaker and amp draw data shown are for models without electric heat. Consult factory for other configurations. Manufacturer strongly recommends using a circuit breaker instead of fuses. Use 3-pole circuit breakers for 3-phase machines.

****Agency approvals may vary depending on configuration. Consult factory for details. Steam connection requires 1/2" N.P.T.

For the most accurate information, the installation guide should be used for all design and construction purposes. Due to continuous product improvements, design and specifications subject to change without notice. The quality management system of Alliance Laundry Systems has been registered to ISO 9001.