Huebsch®
YOUR SMART LAUNDRY PARTNER

On-Premises **170-lb Tumble Dryer**

Our single-pocket tumble dryers* feature concentrated airflow and sealed cylinder rims to ensure energy savings. This superior drying performance helps laundries maximize throughput to meet the daily workload every time. Our tumble dryers are designed with fewer moving parts, so you'll face less maintenance and wear and tear.

Efficient

High-performance heater box increases energy efficiency and reduces drying times to help on-premises laundries increase throughput, while decreasing operating costs.

Spacesaver

The 55 lb (24.9 kg) capacity model fits through a 36 in (914 mm) door opening and is 10 in (251 mm) shorter than our 50 lb (22.7 kg) unit, making it an option for laundries with limited space.

Performance

Available in 25 lb, 30 lb, 35 lb, 50 lb, 55 lb, 75 lb, 120 lb, 170 lb and 200 lb capacities, there's a tumble dryer to meet the needs of any on-premises laundry.

Galaxy™

The Galaxy Control offers the flexibility of 30 programmable cycles combined with the accuracy of our moisture-sensing technology saving time and energy increasing the life of your linens, saving time and energy.

Dual Digital

With features including one-touch cycle repeat, automatic extended tumble and a large digital countdown display, it's simple to set your drying time, temperature and cool down with the Dual Digital Control.

* Not all models are available in all markets. In order to highlight key details, machine images do not adhere to a standard scale.

On-Premises **170-lb Tumble Dryer** Specifications

MODEL			HT170
CONTROL OPTION			Galaxy, Dual Digital
CAPACITY - lb (kg)			170 (77)
OVERALL WIDTH - in (mm)			52.9 (1345)
OVERALL DEPTH - in (mm)			69.8 (1772)
OVERALL HEIGHT - in (mm)			94 (2390)
CYLINDER DIAMETER - in (mm)			50.8 (1290)
CYLINDER DEPTH - in (mm)			42.5 (1080)
CYLINDER VOLUME - cu. ft. (liters)			49.8 (1410)
DOOR OPENING SIZE - in (mm)			26.9 (683)
ENERGY DATA		Gas Models - Per Pocket	395,000 Btu/hr
		Steam Models - Per Pocket	265,500 Btu/hr
GAS CONNECTIONS - in (npt)			1
PLUMBING CONNECTIONS - STEAM - in (npt)		Inlet	0.75
		Outlet	1
AIR OUTLET - in (mm)			12 (305)
MOTOR -hp		Fan	1.5
		Cylinder	1.5
AIRFLOW - cfm			2150
ELECTRICAL SPECS - amps	Gas & Steam		
	Q	200-240V50/60/3	11
	N	440-480V/50/60/3	6
	P	380-415V/50/60/3	7
SHIPPING DIMENSIONS APPROX. - in (mm)		Width	52.1 (1320)
		Depth	73.8 (1870)
		Height	99 (2510)
NET WEIGHT - lb (kg)		Gas	1400 (635)
		Steam	1550 (705)
SHIPPING WEIGHT - lb (kg)		Gas	1480 (670)
		Steam	1630 (740)
AGENCY APPROVALS			CSA

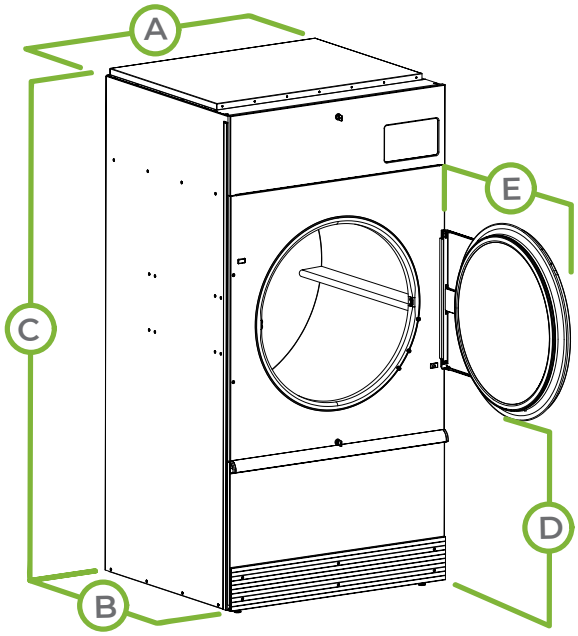

MODEL	HT170
A. OVERALL WIDTH - in (mm)	52.9 (1345)
B. *OVERALL DEPTH - in (mm)	69.8 (1772)
C. OVERALL HEIGHT - in (mm)	94 (2390)
D. DOOR BOTTOM TO FLOOR - in (mm)	33.9 (860)
E. DOOR SWING - in (mm)	32.5 (825)

Tumble dryer models are made to suit a variety of electrical service characteristics. See your Huebsch distributor for specifications. For further details on installation, refer to Installation, Operation and Maintenance instructions supplied with the tumble dryer. Amperage ratings available in Installation Manual.

For the most accurate information, the installation guide should be used for all design and construction purposes. Due to continuous product improvements, design and specifications subject to change without notice. The quality management system of Alliance Laundry Systems has been registered to ISO 9001.