Installation Instructions

for Dryers

Inside.....

Dimensions..... 4
Before You Start..... 5
Installing the Dryer..... 6
Installer Checklist ..... Back Cover

Date Purchased _____
Model Number _____
Serial Number _____

Keep these instructions for future reference.
(If this machine changes ownership, this manual must accompany machine.)

Alliance™ Laundry Systems

Part No. D506065R11
www.alliancelaundry.com April 2024

IMPORTANT: The electrical installation in the site shall comply with the Australian Electrical Standards, AS3000, SAA wiring rules, and such local regulations that might apply. In Australia and New Zealand, installation must comply with the Gas Installations Standard AS/NZS 5601 Part 1: General Installations.

Read complete Installation and Operation Instructions before using unit.

The maximum drying load (dry weight) shall not exceed 9.0 kg (20 pounds).

WARNING

FOR YOUR SAFETY, the information in this manual must be followed to minimize the risk of fire or explosion or to prevent property damage, personal injury or death.

W033

- **Do not store or use gasoline or other flammable vapors and liquids in the vicinity of this or any other appliance.**
- **WHAT TO DO IF YOU SMELL GAS:**
  - **Do not try to light any appliance.**
  - **Do not touch any electrical switch; do not use any phone in your building.**
  - **Clear the room, building or area of all occupants.**
  - **Immediately call your gas supplier from a neighbor's phone. Follow the gas supplier's instructions.**
  - **If you cannot reach your gas supplier, call the fire department.**
- **Installation and service must be performed by a qualified installer, service agency or the gas supplier.**

W052

IMPORTANT: Purchaser must consult the local gas supplier for suggested instructions to be followed if the dryer user smells gas. The gas utility instructions plus the SAFETY and WARNING note directly above must be posted in a prominent location near the dryer for customer use.

WARNING

- **Installation of unit must be performed by a qualified installer.**
- **Install clothes dryer according to manufacturer's instructions and local codes.**
- **DO NOT install a clothes dryer with flexible plastic venting materials. If flexible metal (foil type) duct is installed, it must be of a specific type identified by the appliance manufacturer as suitable for use with clothes dryers. Refer to section on connecting exhaust system. Flexible venting materials are known to collapse, be easily crushed, and trap lint. These conditions will obstruct clothes dryer airflow and increase the risk of fire.**

W729R1

© Copyright 2024, Alliance Laundry Systems LLC

All rights reserved. No part of the contents of this book may be reproduced or transmitted in any form or by any means without the expressed written consent of the publisher.

WARNING

Do not spray aerosols in the vicinity of this appliance while it is in operation. Do not use or store flammable materials in or near this appliance. Do not place articles on or against this appliance. Do not modify this appliance. This appliance shall not be used to dry off solvents or dry cleaning fluids. Oil-affected items can ignite spontaneously, especially when exposed to heat sources such as in a dryer. The items become warm, causing an oxidation reaction in the oil. Oxidation creates heat. If the heat cannot escape, the items can become hot enough to catch fire. Piling, stacking or storing oil-affected items can prevent heat from escaping and so create a fire hazard. If it is unavoidable that fabrics that contain vegetable or cooking oil or have been contaminated by hair care products be placed in a tumble dryer they should first be washed in hot water with extra detergent - this will reduce, but not eliminate, the hazard. The dryer is not to be used if industrial chemicals have been used for cleaning. Adequate ventilation shall be provided to avoid the back flow of gases into the room from any fuel burning appliances, including open fires.

W1074

FOR YOUR SAFETY

Do not store or use gasoline or other flammable vapors and liquids in the vicinity of this or any other appliance.

W053

© Copyright, Alliance Laundry Systems LLC – DO NOT COPY or TRANSMIT

Dimensions

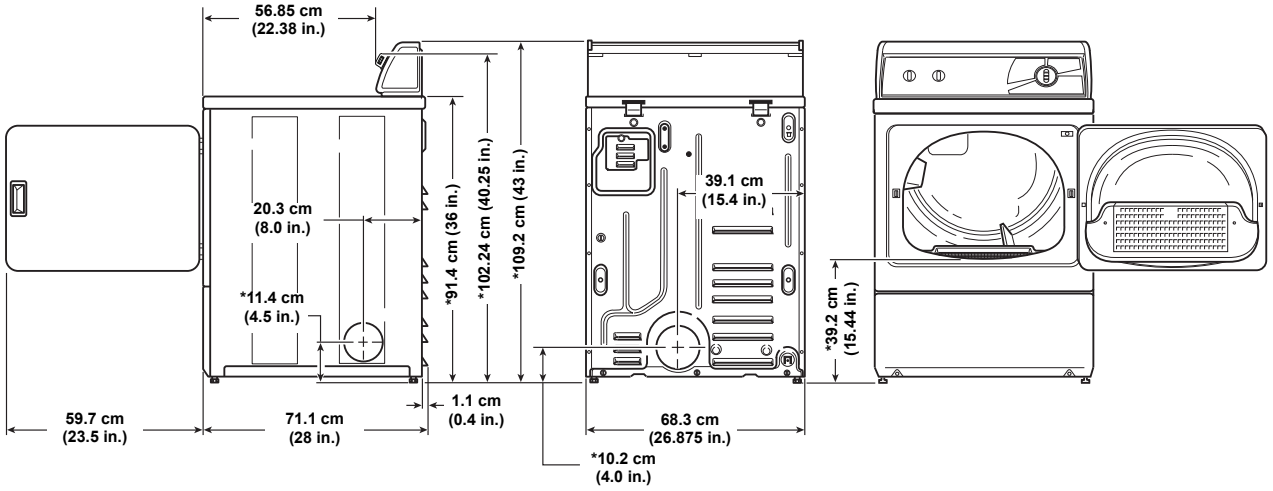

ELECTRIC DRYERS

DRY2275N

*** With leveling legs turned into base.**
NOTE: Exhaust openings are 10.2 cm (4 inch) metal ducting.

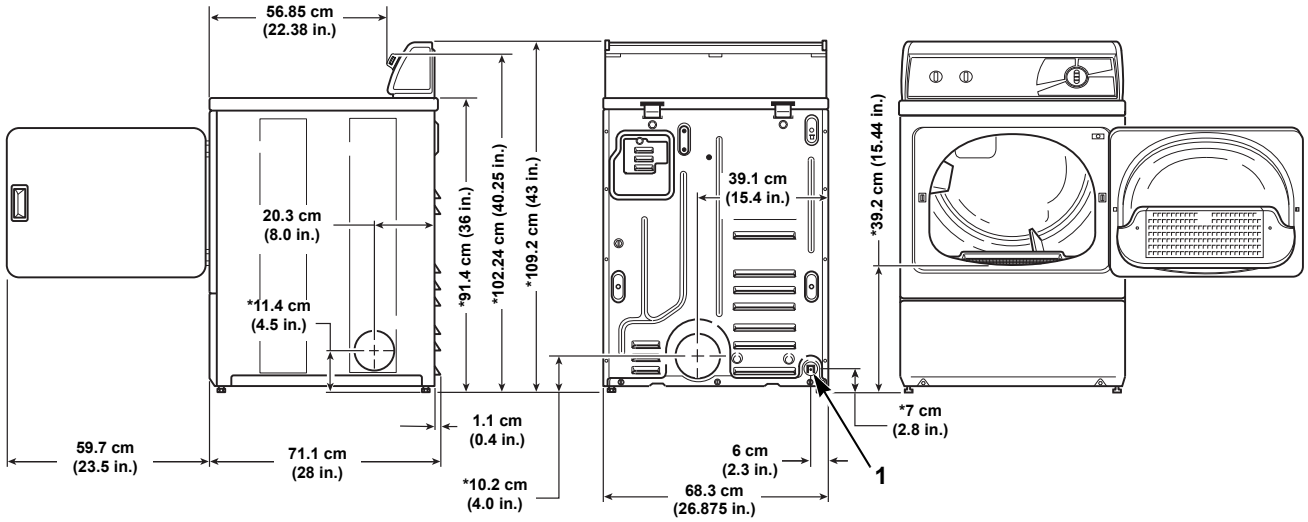

GAS DRYERS

DRY2276N

*** With leveling legs turned into base.**
NOTE: Exhaust openings are 10.2 cm (4 inch) metal ducting.

1 3/8 in. NPT Gas Connection

© Copyright, Alliance Laundry Systems LLC – DO NOT COPY or TRANSMIT

Before You Start

Supplies

For most installations, the basic supplies you will need are:

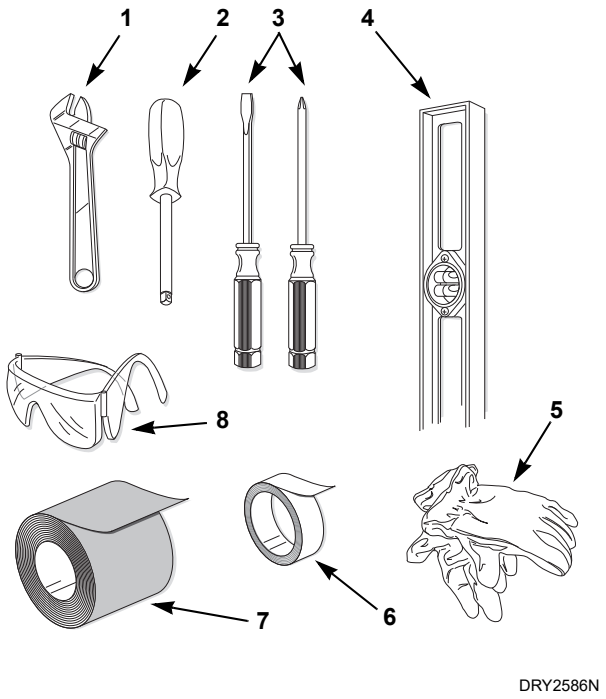

1	Wrench
2	1/4 inch Driver
3	Screwdrivers
4	Level
5	Gloves
6	Teflon Tape
7	Duct Tape
8	Safety Glasses

Figure 1

WARNING

Any disassembly requiring the use of tools must be performed by a suitably qualified service person.

W299

© Copyright, Alliance Laundry Systems LLC – DO NOT COPY or TRANSMIT

Installing the Dryer

Step 1: Position and Level the Dryer

Install dryer before washer. This allows room for attaching exhaust duct.

Select a location with a solid floor. Dryers installed in residential garages must be elevated 46 cm (18 inches) above the floor.

No other fuel burning appliance should be installed in the same closet with the dryer.

The dryer must not be installed or stored in an area where it will be exposed to water and/or weather.

Leveling legs can be adjusted from inside the dryer with a 1/4 inch driver. All four legs must rest firmly on the floor so the weight of the dryer is evenly distributed.

The dryer needs sufficient clearance and an adequate air supply for proper operation and ventilation, and for easier installation and servicing. (Minimum clearances are shown below).

The dryer must not be installed behind a lockable door, a sliding door or a door with a hinge on the opposite side to that of the dryer, in such a way that a full opening of the dryer door is restricted.

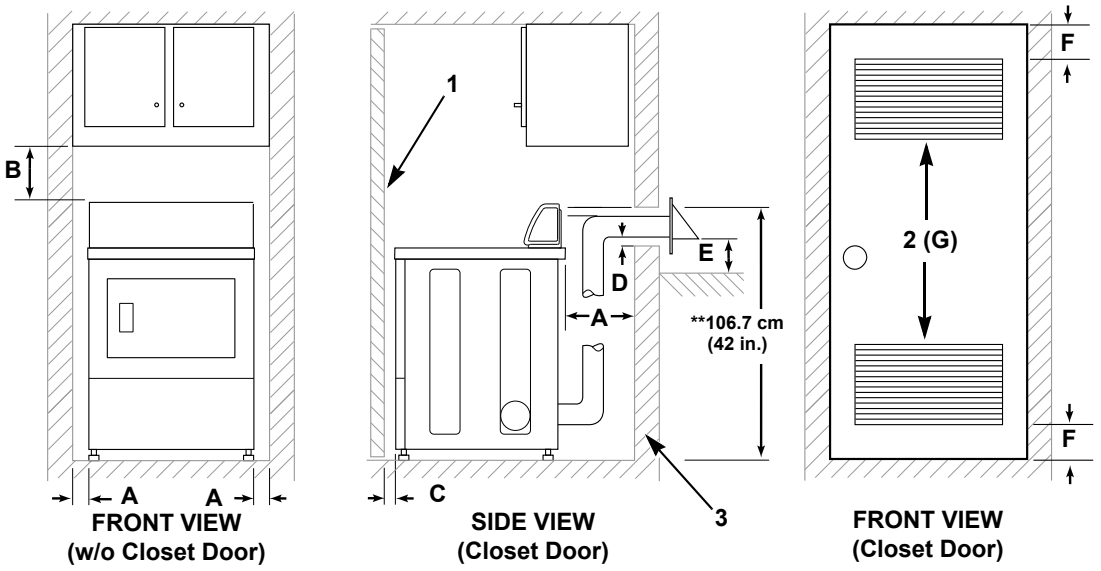

Area	Description	Free Standing/Alcove Installation**	Closet Installation**
A	Dryer sides and rear clearance	0 cm (0 in.)	0 cm (0 in.)
B	Dryer top clearance	30.5 cm (12 in.)	30.5 cm (12 in.)
C	Dryer front clearance	Not Applicable	5.1 cm (2 in.)
D	Exhaust duct clearance to combustible material	5.1 cm (2 in.)	5.1 cm (2 in.)
E	Weather hood to ground clearance	30.5 cm (12 in.)	30.5 cm (12 in.)
F	Distance from floor or ceiling to air opening edge	Not Applicable	7.6 cm (3 in.)
G*	Area of centered air openings in closet door	Not Applicable	260 sq. cm/open (40 sq. in.)

*Louvered door with equivalent air openings is acceptable. (Minimum clearances are shown.)
**The distances listed are the minimum clearances for combustible materials.

1 Closet Door
2 Centered Air Openings (G) (2 Openings minimum)
3 Outer Wall of Enclosure

****NOTE: For new installations, locate top of wall vent 106.7 cm (42 inches) above floor to make venting easier to connect.**

Figure 2

© Copyright, Alliance Laundry Systems LLC – DO NOT COPY or TRANSMIT

Place the dryer in position, and adjust the legs until the dryer is level from side to side and front to back. The dryer must not rock.

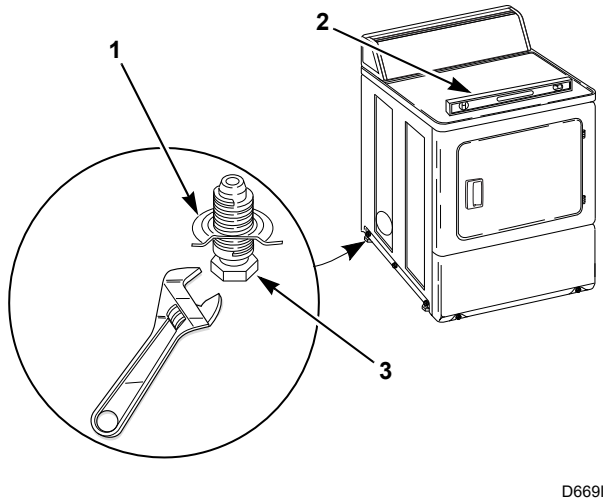

1	Dryer Base
2	Level
3	Leveling Leg

Figure 3

IMPORTANT: In mobile home installations, gas dryers MUST be permanently attached to the floor at the time of installation. Order No. 526P3 Dryer Installation Kit (available at extra cost) for a manufactured (mobile) home installation. Follow the instructions supplied with the kit.

Step 2: Connect Dryer Exhaust System

WARNING

A clothes dryer produces combustible lint. To reduce the risk of fire and combustion gas accumulation the dryer MUST be exhausted to the outdoors.

W116

To reduce the risk of fire and the accumulation of combustion gases, DO NOT exhaust dryer air into a window well, gas vent, chimney or enclosed, unventilated area, such as an attic, wall, ceiling, crawl space under a building or concealed space of a building.

W045

WARNING

To reduce the risk of fire, DO NOT use plastic or thin foil ducting to exhaust the dryer.

W354

© Copyright, Alliance Laundry Systems LLC – DO NOT COPY or TRANSMIT

- DO NOT use plastic, thin foil or type B ducting. Rigid metal duct is recommended. Refer to *Figure 4*.

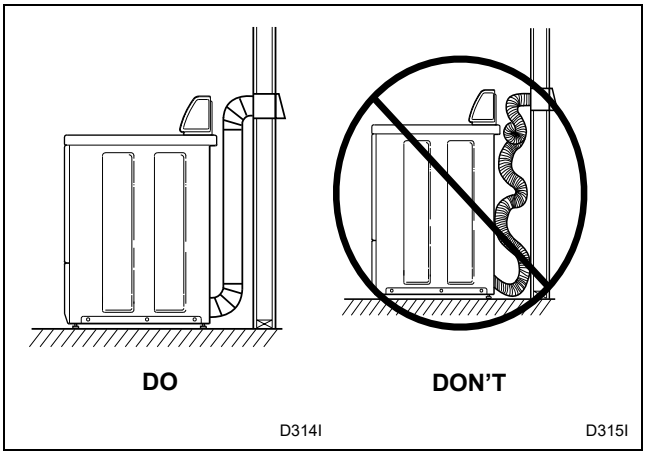

Figure 4

- Locate dryer so exhaust duct is as short as possible.
- Be certain old exhaust ducts are cleaned before installing your new dryer.
- Use 102 mm (4 inch) diameter rigid or flexible metal duct.
- The male end of each section of duct must point away from the dryer.
- Use as few elbows as possible.
- Use of duct tape or pop-rivets on all seams and joints is recommended, if allowed by local codes. DO NOT use sheet metal screws or fasteners on exhaust pipe joints which extend into the duct and catch lint.
- Ductwork that runs through unheated areas must be insulated to help reduce condensation and lint build-up on pipe walls.
- Install backdraft dampers in multi-dryer installations.
- In mobile home installations, dryer exhaust duct must be secured to mobile home structure.
- Dryer exhaust duct MUST NOT terminate under mobile home.
- Exhaust duct must not be connected to any other duct, vent, chimney or flue that is used for another appliance.
- Dryer exhausts 180 cfm (measured at back of dryer).
- DO NOT install flexible duct in concealed spaces, such as a wall or ceiling.
- Static pressure in exhaust duct should not be greater than .1 kPa water column (.4 in.), measured with manometer placed on exhaust duct 61 cm (2 ft.) from dryer (check with dryer running and no load).
- Exhausting dryer in hard-to-reach locations can be done by installing 521P3 Flexible Metal Vent Kit (available as optional equipment at extra cost).
- Sufficient make-up air must be supplied to replace the air exhausted by the dryer. The free area of any opening for outside air must be at least 260 cm^2 (40 $in.^2$).
- Energy efficient buildings with low air infiltration rates should be equipped with an air exchanger that can accommodate on demand make-up air needs in the laundry room. These devices can be obtained through your building contractor or building material suppliers.
- Do not draw make-up air from a room containing a gas fired water heater, a dry cleaner or a hair salon.
- **Failure to exhaust dryer properly will void warranty.**

NOTE: Venting materials are not supplied with the dryer (obtain locally).

IMPORTANT: DO NOT block the airflow at the bottom of the dryer's front panel with laundry, rugs, etc. Blockage will decrease airflow through the dryer, thus reducing the efficiency of the dryer.

© Copyright, Alliance Laundry Systems LLC – DO NOT COPY or TRANSMIT

Exhaust Direction

The dryer can be exhausted to the outdoors through the back, left, right or bottom of the dryer. **EXCEPTION: Gas dryers cannot be vented out the left side because of the burner housing.**

Dryer is shipped from factory ready for rear exhaust.

Exhausting the dryer through sides or bottom can be accomplished by installing a Directional Exhaust Kit, 528P3, available as optional equipment at extra cost.

Exhaust System

For best drying results, recommended maximum length of exhaust system is shown in *Table 1*.

To prevent backdraft when dryer is not in operation, outer end of exhaust pipe must have a weather hood with hinged dampers (obtain locally).

NOTE: Weather hood should be installed at least 30.5 cm (12 inches) above the ground. Larger clearances may be necessary for installations where heavy snowfall can occur.

Number of 90° Elbows	Weather Hood Type	
	Recommended	Use Only for Short Run installations
	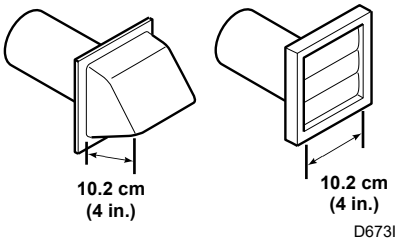	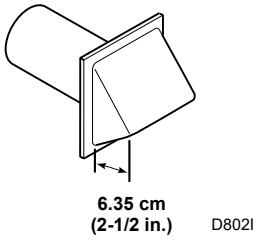
Maximum length of 10.2 cm (4 in.) diameter rigid metal duct.		
0	19.8 m (65 feet)	16.8 m (55 feet)
1	16.8 m (55 feet)	14.3 m (47 feet)
2	14.3 m (47 feet)	12.5 m (41 feet)
3	11.0 m (36 feet)	9.1 m (30 feet)
4	8.5 m (28 feet)	6.7 m (22 feet)
NOTE: Deduct 1.8 m (6 feet) for each additional elbow.		

Table 1

NOTE: The maximum length of a 10.2 cm (4 in.) diameter flexible metal duct must not exceed 2.4 m (7.87 ft.), as required to meet UL2158, clause 7.3.2A.

© Copyright, Alliance Laundry Systems LLC – DO NOT COPY or TRANSMIT

Step 3: (Gas Dryer Only) Connect Gas Supply Pipe

NOTE: The gas service to a gas dryer must conform with the local codes and ordinances and in Australia and New Zealand, installation must comply with the Gas Installations Standard AS/NZS 5601 Part 1: General Installations. In the absence of local codes and ordinances, applicable National codes should be followed.

Connection of Gas Supply Pipe

1. Install the dryer with sufficient clearance for adequate air circulation, and for the ease of the dryer installation, servicing and operation. For maximum drying performance, we recommend you allow more clearance than the clearances that are listed throughout this manual.
2. Remove the shipping cap from the gas connection at the rear of the dryer. Make sure you do not damage the pipe threads when removing the cap.
3. Make certain your dryer is equipped for use with the type of gas in your laundry room.

NOTE: Natural gas, 37.3 MJ/m^3 (1000 Btu/ft^3), service must be supplied at 1.13 kPa (4.54 inch) water column pressure. Do not connect the dryer to L.P. (Liquefied Petroleum) gas service without converting the gas valve. A No. 401P3 L.P. Gas Conversion Kit must be installed by the Manufacturer's Authorized Dealers, Distributors, or local service personnel.

NOTE: L.P. gas, 93.1 MJ/m^3 (2500 Btu/ft^3), service must be supplied at 2.75 kPa (11.04 inch) water column pressure and a vent to the outdoors must be provided.

4. If local codes allow the use of flexible gas tubing, connect the 3/8 inch NPT (National Pipe Thread) gas connection at the rear of the dryer to the laundry room's gas line with new flexible stainless steel tubing (using design certified Australian Gas Association connector only).

IMPORTANT: Use local codes of practice for gas installation.

This dryer is equipped with jet for Natural gas.

Gas Consumption	Natural	21.9 MJ
	L.P.	21.9 MJ
Gas Supply Pressure	Natural	1.13 kPa
	L.P.	2.75 kPa
Gas Injector Size	Natural	2.2 mm (.09 inch)
	L.P.	1.3 mm (.05 mm)

WARNING

To reduce the risk of gas leaks, fire or explosion:
- **The dryer must be connected to the type of gas as shown on nameplate located in the door recess.**
- **Use a new flexible stainless steel connector.**
- **Use pipe joint compound insoluble in L.P. (Liquefied Petroleum) Gas, or Teflon tape, on all pipe threads.**
- **Purge air and sediment from gas supply line before connecting it to the dryer. Before tightening the connection, purge remaining air from gas line to dryer until odor of gas is detected. This step is required to prevent gas valve contamination.**
- **Do not use an open flame to check for gas leaks. Use a non-corrosive leak detection fluid.**
- **Any disassembly requiring the use of tools must be performed by a suitably qualified service person.**

W316

© Copyright, Alliance Laundry Systems LLC – DO NOT COPY or TRANSMIT

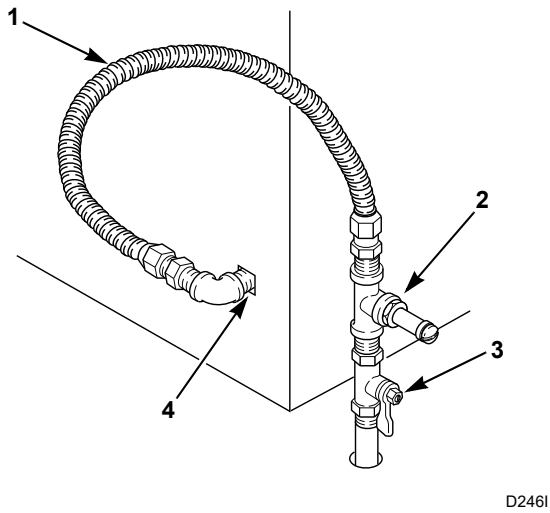

1	New Stainless Steel Flexible Connector – Use Only If Allowed By Local Codes (Use design AGA certified connector)
2	Pressure Test Point
3	External Shut-Off Valve
4	3/8 in. NPT Gas Connection

Figure 5

NOTE: When connecting gas supply line, a pressure test point must be installed downstream from the shutoff valve for checking inlet gas pressure.

5. The gas line to your laundry room should be made of black iron pipe. A 3/8 inch pipe with an inside diameter of 11.7 mm (0.46 inch) will be adequate if length of supply line is not over 6 m (20 feet). If length exceeds this, use 12.7 mm (1/2 inch) pipe. If copper semi-rigid tubing is used it must be internally tinned or equivalently treated to resist sulfur corrosion.

NOTE: The dryer and its appliance main gas valve must be disconnected from the gas supply piping system during any pressure testing of that system at test pressures in excess of 3.45 kPa (1/2 psig).

6. Check all pipe connections (internal and external) for gas leaks with a soapy solution. Gas connections should be checked annually for leakage.
7. Be sure the shut off valve in your dryer is OPEN. Your dryer is shipped with the valve open.
8. The dryer gas valve is equipped with a pressure test point for checking manifold pressure.

For proper operation at altitudes above 760 m (2500 feet) the gas valve spud orifice size must be reduced to ensure complete combustion. Refer to *Table 2* and *Table 3*.

Natural Gas Altitude Adjustments					
Altitude		Orifice Size			Part Number
m	ft	No.	mm	inches	
760	2500	45	2.08	0.0820	503779
1370	4500	46	2.06	0.0810	503780
1830	6000	47	1.99	0.0785	503781
2290	7500	48	1.93	0.0760	503782
2900	9500	49	1.85	0.0730	503783
3355	11,000	50	1.78	0.0700	503784

Table 2

LP Altitude Adjustments					
Altitude		Orifice Size			Part Number
m	ft	No.	mm	inches	
1370	4500	56	1.2	0.0465	503786
3000	9500	57	1.1	0.043	60941

Table 3

Step 4: Reverse Door, If Desired

The door on this dryer is completely reversible. To reverse door proceed as follows:

1. Remove four hinge attaching screws.

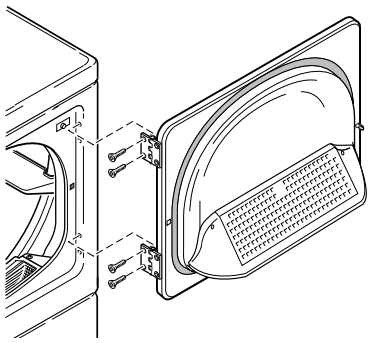

2. Remove all nine screws

© Copyright, Alliance Laundry Systems LLC – DO NOT COPY or TRANSMIT

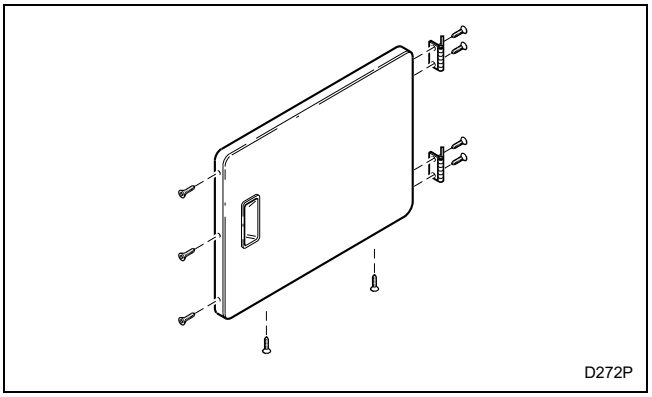

3. Pull bottom of door liner out, then pull down, removing door liner from door panel.

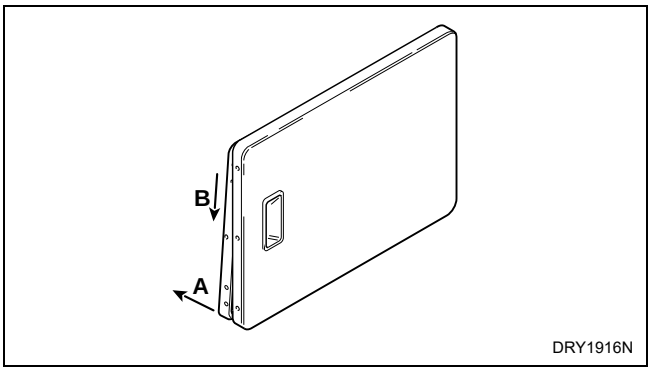

© Copyright, Alliance Laundry Systems LLC – DO NOT COPY or TRANSMIT

4. Rotate door panel 180 degrees as shown.

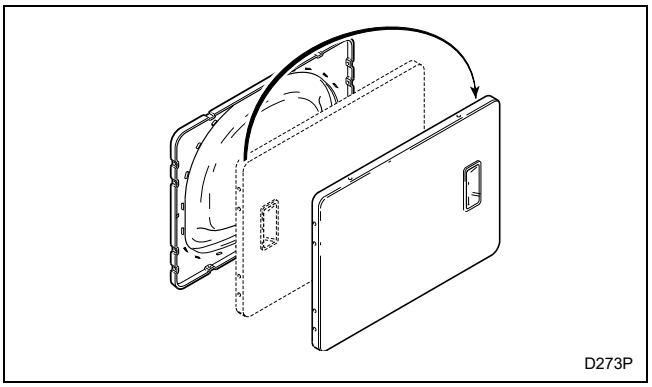

5. Remove door strike from door liner and reinstall on opposite side.

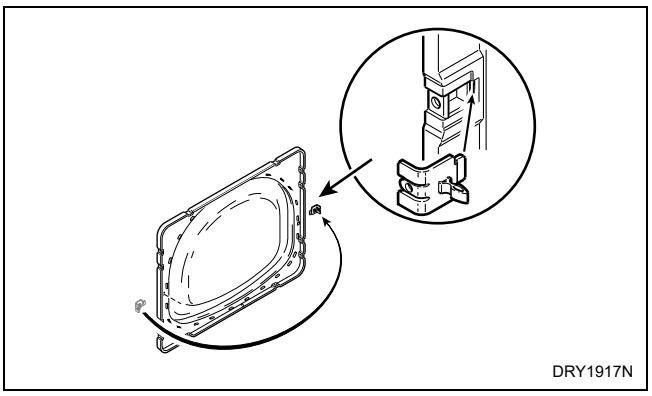

6. Insert liner under flange on bottom of door, then push top of door liner into place.

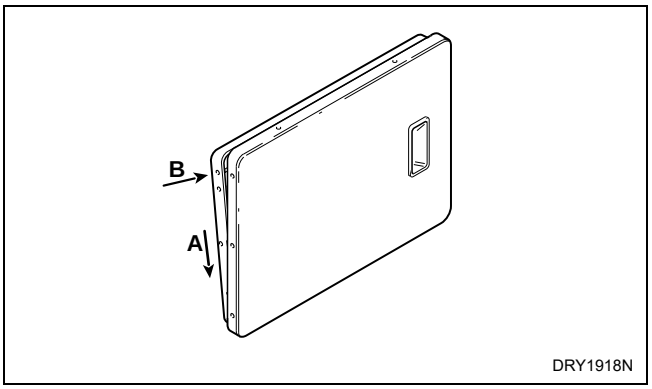

7. Reinstall nine screws removed in step 2.

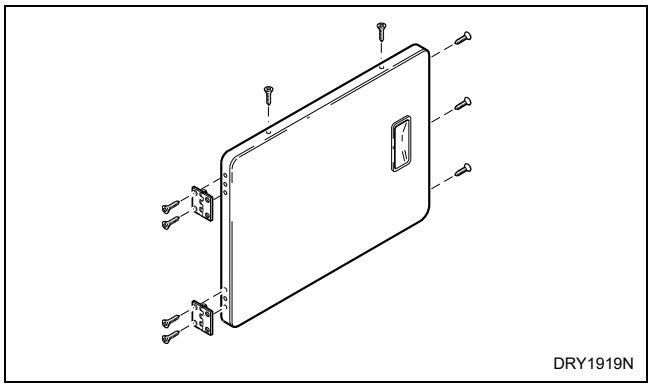

8. Using a screwdriver, remove two door plugs, and reinstall on opposite side of door opening.

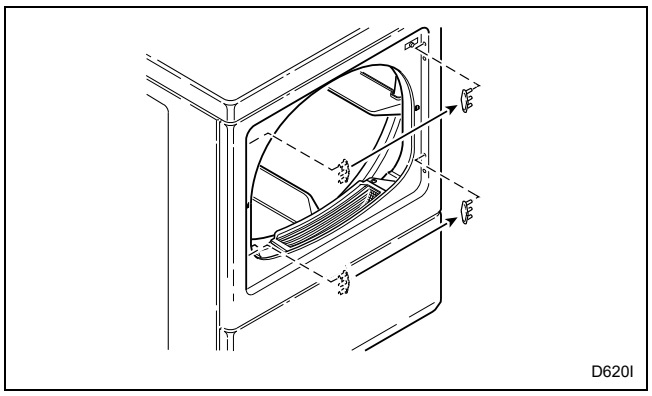

9. Reinstall four hinge attaching screws removed in step 1.

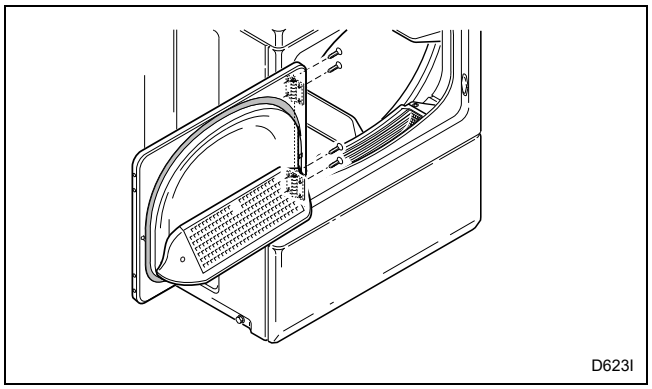

© Copyright, Alliance Laundry Systems LLC – DO NOT COPY or TRANSMIT

Step 5: Wipe Out Inside of Dryer Drum

Before using the dryer for the first time, use an all-purpose cleaner, or a detergent and water solution, and a damp cloth to remove shipping dust from inside the drum.

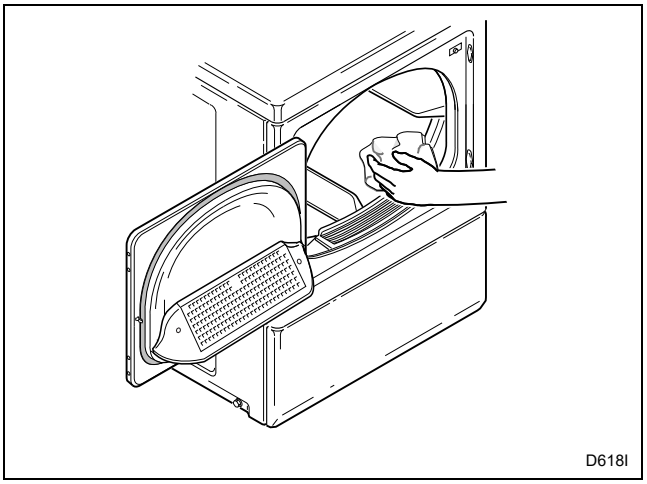

Figure 6

Step 6: Connect the Dryer to Electrical Power

Electric Dryer

NOTE: The wiring diagram is located inside the control hood.

WARNING

To reduce the risk of fire, electric shock or personal injury, all wiring and earthing to the dryer MUST conform with the latest edition of the Australian Electrical Standards, AS3000, SAA wiring rules, and such local regulations that might apply.

W478

This dryer is designed to be operated on a two-wire, plus earth, 240 Volt, 50 Hertz, single-phase circuit, fused at 20 Amperes.

Insert the dryer's lead-in cord plug into an earthing three-slot-plus earth, wall receptacle on a separate circuit. DO NOT OPERATE OTHER APPLIANCES ON THE SAME CIRCUIT WHEN THE DRYER IS OPERATING. DO NOT USE AN EXTENSION CORD.

CAUTION

If this appliance is supplied from a cord extension set or an electrical portable outlet device, the cord extension set or electrical portable outlet device must be positioned so that it is not subject to splashing or ingress of moisture.

W563

If the supply cord is damaged, it must be replaced by the manufacturer, its special agent or similarly qualified persons in order to avoid a hazard.

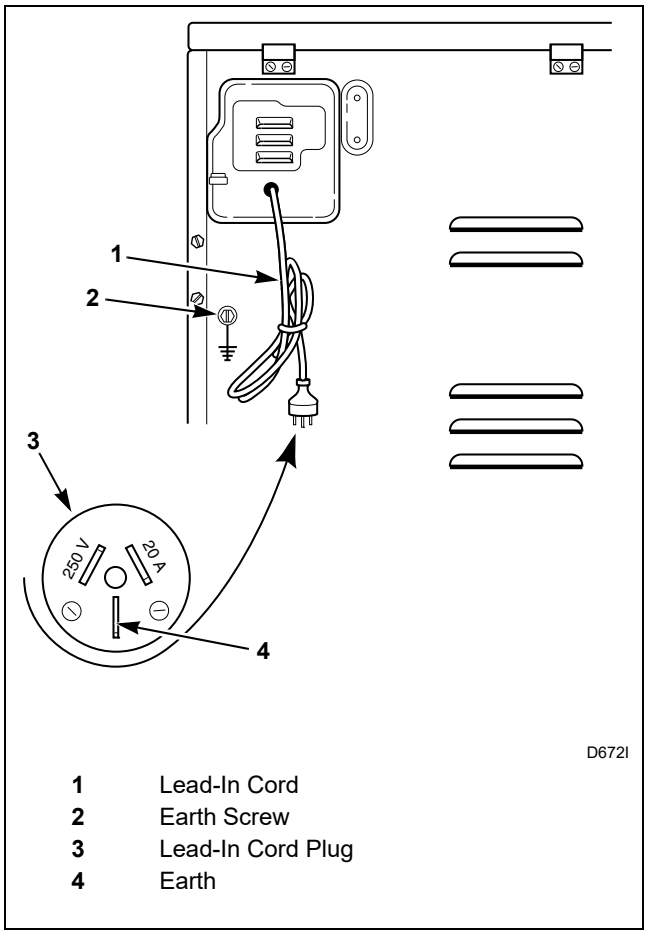

1	Lead-In Cord
2	Earth Screw
3	Lead-In Cord Plug
4	Earth

Figure 7

© Copyright, Alliance Laundry Systems LLC – DO NOT COPY or TRANSMIT

Gas Dryer

NOTE: The wiring diagram is located inside the control hood.

WARNING

To reduce the risk of fire, electric shock or personal injury, all wiring and earthing to the dryer MUST conform with the latest edition of the Australian Electrical Standards, AS3000, SAA wiring rules, and such local regulations that might apply.

W478

This dryer is designed to be operated on a two-wire, plus earth, 240 Volt, 50 Hertz, single-phase circuit, fused at 10 Amperes.

Insert the dryer's lead-in cord plug into an earthing three-slot wall receptacle on a separate circuit. DO NOT OPERATE OTHER APPLIANCES ON THE SAME CIRCUIT WHEN THE DRYER IS OPERATING. DO NOT USE AN EXTENSION CORD.

CAUTION

If this appliance is supplied from a cord extension set or an electrical portable outlet device, the cord extension set or electrical portable outlet device must be positioned so that it is not subject to splashing or ingress of moisture.

W563

If the supply cord is damaged, it must be replaced by the manufacturer, its special agent or similarly qualified persons in order to avoid a hazard.

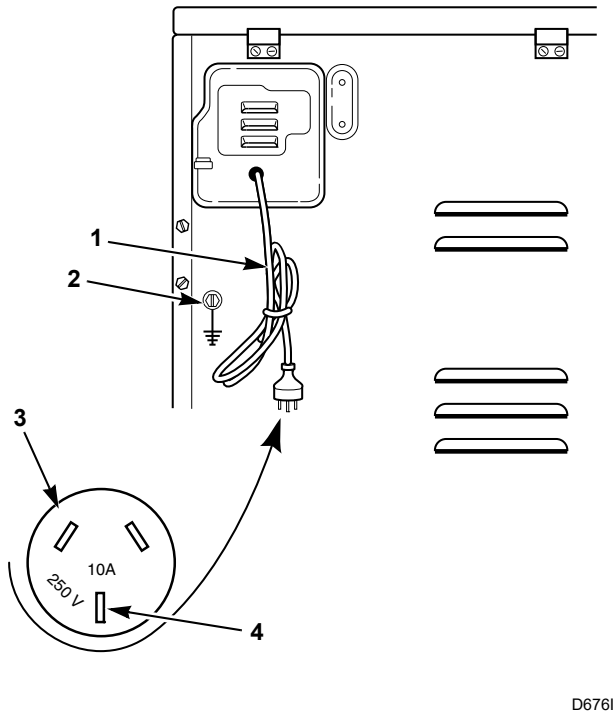

1	Lead-In Cord
2	Earth Screw
3	Lead-In Cord Plug
4	Earth

Figure 8

© Copyright, Alliance Laundry Systems LLC – DO NOT COPY or TRANSMIT

Earthing Instructions

The dryer must be earthed. In the event of malfunction or breakdown, earthing will reduce the risk of electric shock by providing a path of least resistance for electric current. The dryer is equipped with a cord having an equipment-earthing conductor and a three-prong earthing plug. The plug must be plugged into an appropriate outlet that is properly installed and earthed in accordance with local codes and ordinances.

Do not modify the plug provided with the dryer – if it will not fit the outlet, have a proper outlet installed by a qualified electrician.

WARNING

Improper connection of the equipment-earthing conductor can result in a risk of electric shock. Check with a qualified electrician or serviceman if you are in doubt as to whether the dryer is properly earthed.

W159

If the electrical supply does not meet the above specifications and/or you are not sure your building has an effective earth, have a qualified electrician or your local electrical utility company check it and correct any problems.

Step 7: Recheck steps 1-6

Refer to ***Installer Checklist*** on the back cover of this manual and make sure that unit is installed correctly. After installation is complete, run the dryer through a cycle to test it's operation.

Step 8: Check Heat Source

Electric Dryers

Close the loading door and start the dryer in a heat setting (refer to the Dryer User's Guide supplied with the unit). After the dryer has operated for three minutes, the exhaust air or exhaust pipe should be warm.

Gas Dryers

IMPORTANT: This operation is to be conducted by qualified personnel only.

To view the burner flame, remove the lower front panel of the dryer.

Close the loading door, start the dryer in a heat setting (refer to the Dryer User's Guide supplied with the unit). The dryer will start, the igniter will glow red and the main burner will ignite.

IMPORTANT: If all air is not purged out of gas line, gas igniter may go off before gas is ignited. If this happens, after approximately two minutes igniter will again attempt gas ignition.

IMPORTANT: If igniter does not light, make sure gas is turned on.

After the dryer has operated for approximately five minutes, observe burner flame through lower front panel. Adjust the air shutter to obtain a soft, uniform blue flame. (A lazy, yellow-tipped flame indicates lack of air. A harsh, roaring, very blue flame indicates too much air.) Adjust the air shutter as follows:

1. Loosen the air shutter lockscrew.
2. Turn the air shutter to the left to get a luminous yellow-tipped flame, then turn it back slowly to the right to obtain a steady, soft blue flame.
3. After the air shutter is adjusted for proper flame, tighten the air shutter lockscrew securely.
4. Reinstall the lower front panel.

WARNING

To reduce the risk of serious injury or death, the lower front panel must be in place during normal operation.

W158

After the dryer has operated for approximately three minutes, exhaust air or exhaust pipe should be warm.

WARNING

Any disassembly requiring the use of tools must be performed by a suitably qualified service person.

W299

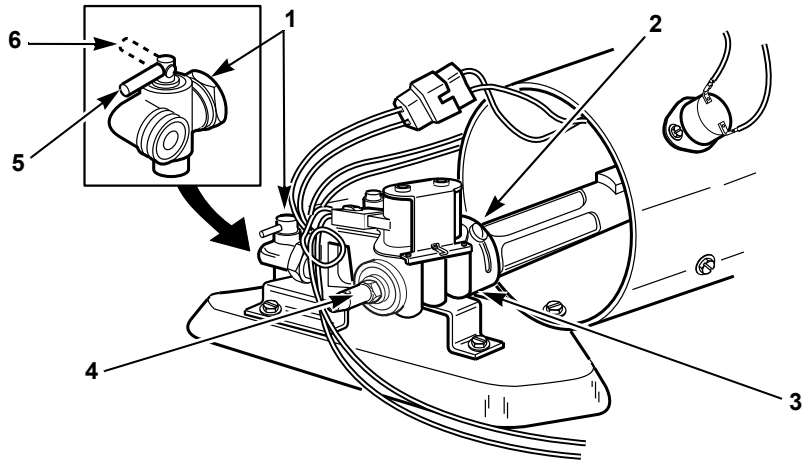

DRY212N

1	Shut-off Valve Handle	**4**	Pressure Test Point
2	Air Shutter Lockscrew	**5**	Open Position
3	Air Shutter	**6**	Closed Position

Figure 9

Installer Checklist

Fast Track for Installing the Dryer

(Refer to the manual for more detailed information)

1

- **Position and Level the Dryer.**

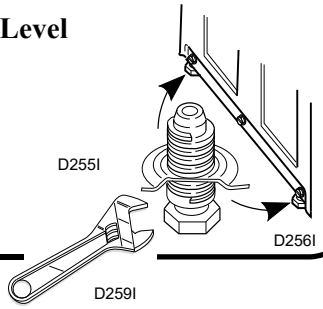

☐ ***CHECK***

2

- **Connect Dryer Exhaust System.**

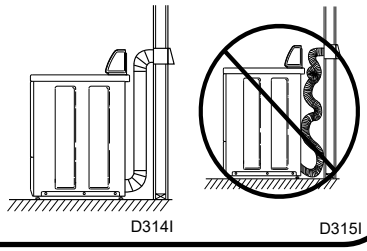

☐ ***CHECK***

GAS DRYER ONLY

3

- **Connect Gas Supply Pipe.**
- **Check for Gas Leaks.**

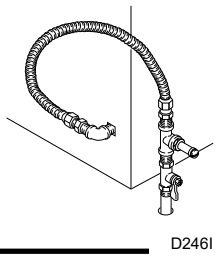

☐ ***CHECK***

4

- **Reverse Door, if Desired.**

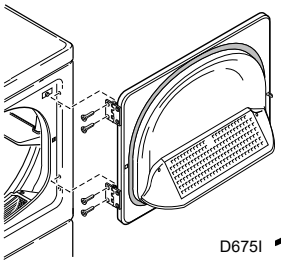

☐ ***CHECK***

5

- **Wipe Out Inside of Dryer.**

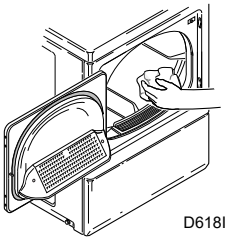

☐ ***CHECK***

6

- **Plug In the Dryer.**

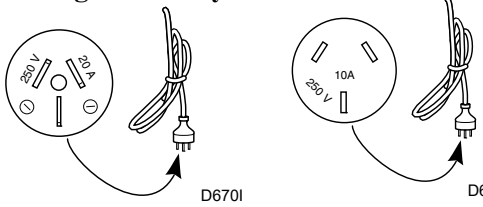

☐ ***CHECK***

7

- **Recheck Steps 1-6.**

☐ ***CHECK***

8

- **Start and Run Dryer in Heat Setting to Verify Dryer is Heating.**

☐ ***CHECK***

© Copyright, Alliance Laundry Systems LLC – DO NOT COPY or TRANSMIT