Speed Queen

User's Guide

for your dryer

Inside ...

Safety Information. . . . 3
Before Drying 6
Drying Special Items . . 8
Operating Your Dryer . . 11
Clothing Care Labels . . 14
Maintenance 15
Troubleshooting 17

Para bajar una copia de estas instrucciones en español, visite www.speedqueen.com.

Part No. D512062R2
March 2005

www.speedqueen.com

WARNING

FOR YOUR SAFETY, the information in this manual must be followed to minimize the risk of fire or explosion or to prevent property damage, personal injury or death.

W033

- **Do not store or use gasoline or other flammable vapors and liquids in the vicinity of this or any other appliance.**
- **WHAT TO DO IF YOU SMELL GAS:**
  - **Do not try to light any appliance.**
  - **Do not touch any electrical switch; do not use any phone in your building.**
  - **Clear the room, building or area of all occupants.**
  - **Immediately call your gas supplier from a neighbor's phone. Follow the gas supplier's instructions.**
  - **If you cannot reach your supplier call the fire department.**
- **Installation and service must be performed by a qualified installer, service agency or the gas supplier.**

W052

Product Registration

New owners of Speed Queen equipment are encouraged to register their appliance to insure proper warranty coverage.

Register by returning the product registration card enclosed in the accessories bag or online at www.speedqueen.com.

All information will be kept confidential and will not be distributed to other parties.

Safety Information

Explanation of Safety Messages

Throughout this manual and on machine decals, you will find precautionary statements ("DANGER," "WARNING," and "CAUTION") followed by specific instructions. These precautions are intended for the personal safety of the operator, user, servicer, and those maintaining the machine.

DANGER

Indicates an imminently hazardous situation that, if not avoided, will cause severe personal injury or death.

WARNING

Indicates a hazardous situation that, if not avoided, could cause severe personal injury or death.

CAUTION

Indicates a hazardous situation that, if not avoided, may cause minor or moderate personal injury or property damage.

Additional precautionary statements ("IMPORTANT" and "NOTE") are followed by specific instructions.

IMPORTANT: The word "IMPORTANT" is used to inform the reader of specific procedures where minor machine damage will occur if the procedure is not followed.

NOTE: The word "NOTE" is used to communicate installation, operation, maintenance or servicing information that is important but not hazard related.

Important Safety Instructions

Save These Instructions

WARNING

To reduce the risk of fire, electric shock, serious injury or death to persons when using your dryer, follow these basic precautions:

W130

1. Read all instructions before using the dryer.
2. Refer to the GROUNDING INSTRUCTIONS in the INSTALLATION manual for the proper grounding of the dryer.
3. Do not dry articles that have been previously cleaned in, soaked in, washed in, or spotted with gasoline, dry-cleaning solvents, other flammable or explosive substances as they give off vapors that could ignite or explode.
4. Do not allow children to play on or in the dryer. Close supervision of children is necessary when the dryer is used near children. This is a safety rule for all appliances.
5. Before the dryer is removed from service or discarded, remove the door to the drying compartment.
6. Do not reach into the dryer if the cylinder is revolving.
7. Do not install or store the dryer where it will be exposed to the water and/or weather.
8. Do not tamper with the controls.

© Copyright 2005, Alliance Laundry Systems LLC
All rights reserved. No part of the contents of this book may be reproduced or transmitted in any form or by any means without the expressed written consent of the publisher.

9. Do not repair or replace any part of the dryer, or attempt any servicing unless specifically recommended in the User-Maintenance Instructions or in published user-repair instructions that you understand and have the skills to carry out.

10. Do not use fabric softeners or products to eliminate static unless recommended by the manufacturer of the fabric softener or product.

11. To reduce the risk of fire, DO NOT DRY plastics or articles containing foam rubber or similarly textured rubberlike materials.

12. Always clean the lint filter after every load. A layer of lint in the filter reduces drying efficiency and prolongs drying time.

13. Keep area around the exhaust opening and adjacent surrounding area free from the accumulation of lint, dust and dirt.

14. The interior of the dryer and the exhaust duct should be cleaned periodically by qualified service personnel.

15. This gas appliance contains or produces a chemical or chemicals which can cause death or serious illness and which are known to the State of California to cause cancer, birth defects, or other reproductive harm. To reduce the risk from substances in the fuel or from fuel combustion, make sure this appliance is installed, operated, and maintained according to the manufacturer's instructions.

16. Dryer will not operate with the loading door open. DO NOT bypass the door safety switch by permitting the dryer to operate with the door open. The dryer will stop tumbling when the door is opened. Do not use the dryer if it does not stop tumbling when the door is opened or starts tumbling without pressing or turning the START mechanism. Remove the dryer from use and call the service person.

17. Do not put articles soiled with vegetable or cooking oil in the dryer, as these oils may not be removed during washing. Due to the remaining oil, the fabric may catch on fire by itself.

18. To reduce the risk of fire, DO NOT put clothes which have traces of any flammable substances such as machine oil, flammable chemicals, thinner, etc. or anything containing wax or chemicals such as in mops and cleaning cloths, or anything dry-cleaned at home with dry-cleaning solvent in the dryer.

19. Use the dryer only for its intended purpose, drying clothes.

20. Always disconnect the electrical power to the dryer before attempting service. Disconnect the power cord by grasping the plug, not the cord.

21. If supply cord is damaged, it must be replaced by a special cord or assembly available from the manufacturer or its service agent.

22. Install this dryer according to the INSTALLATION INSTRUCTIONS. All connections for electrical power, grounding and gas supply must comply with local codes and be made by licensed personnel when required. Do not do it yourself unless you know how!

23. Remove laundry immediately after the dryer stops.

24. Always read and follow manufacturer's instructions on packages of laundry and cleaning aids. Heed all warnings or precautions. To reduce the risk of poisoning or chemical burns, keep them out of reach of children at all times (preferably in a locked cabinet).

25. Do not tumble fiberglass curtains and draperies unless the label says it can be done. If they are dried, wipe out the cylinder with a damp cloth to remove particles of fiberglass.

26. ALWAYS follow the fabric care instructions supplied by the garment manufacturer.
27. Never operate the dryer with any guards and/or panels removed.
28. DO NOT operate the dryer with missing or broken parts.
29. DO NOT bypass any safety devices.
30. Failure to install, maintain, and/or operate this machine according to the manufacturer's instructions may result in conditions which can produce bodily injury and/or property damage.

NOTE: The WARNING AND IMPORTANT SAFETY INSTRUCTIONS appearing in this manual are not meant to cover all possible conditions and situations that may occur. Observe and be aware of other labels and precautions that are located on the machine. They are intended to provide instructions for safe use of the machine. Common sense, caution and care must be exercised when installing, maintaining, or operating the dryer.

Always contact your dealer, distributor, or service agent about any problems or conditions you do not understand.

Before Drying

Energy Saving Tips

- Make sure the lint filter is always clean.
- Do not overload the dryer.
- Do not overdry items.
- Remove items to be ironed while still damp.
- Large loads of similar fabrics dry the most efficiently. However, dry permanent press in smaller loads to prevent wrinkling.
- Use the correct cycle for the type of fabric being dried.
- Locate your dryer so the exhaust duct is as short and straight as possible.
- Do not open the door during the drying cycle.
- Plan to do your laundry on low humidity days; your clothes will dry faster.
- Dry multiple loads of clothes one right after another so dryer interior does not have to be reheated for each load.

Helps and Hints

- The directions for installation and proper exhausting are given in the Installation Instructions which are included with the dryer.
- Static electricity may cause garments of synthetic fibers (as in lingerie) to cling together, especially if they are overdried. The use of a liquid fabric softener in the rinse water of the washer, or a fabric softener sheet in the dryer, will soften clothes and reduce static electricity.
- Do not wash or dry clothes that shed lint in the same load with permanent press or knit garments.
- Remove permanent press loads immediately after dryer stops.
- Follow the care labels on FLAME RETARDANT, SCOTCH- GUARD™, etc., garments for the proper washing and drying.
- If loads should be damp for ironing, turn timer knob to the ENERGY SAVER setting, marked with a dot (•), in AUTOMATIC or TIME DRY cycles.

Sort

If you have correctly sorted the items for washing, they should be properly sorted for drying too.

1. Sort by color.
2. Separate lint shedding fabrics and lint receiving fabrics.

Towels, flannels, chenille, cottons, rugs, etc., shed lint. Corduroys, knits (including socks), permanent press, and synthetics attract lint.

3. Separate no heat, low heat and high heat items.

In any kind of drying, lightweight fabrics will dry faster than heavyweight fabrics. If mixed loads are dried together (such as sheets and towels), remove the lighter weight fabrics when they are dry to prevent overdrying and wrinkling. The best method is to dry clothes which require the same time and temperature in the same load.

Load

WARNING

Do not wash or dry items soiled with vegetable or cooking oils. Some oils may remain after washing and may cause the fabric to catch on fire by itself.

W527

- Do not overload your dryer. Bulk, not weight, determines the load size. If the dryer is overloaded, it could cause discoloration or permanent heat damage to the load.
- There should be space in the dryer for the clothes to tumble freely and help to reduce wrinkles.
- Large and small pieces together make up loads which will tumble well. Permanent press loads should be smaller to provide room for tumbling. Proper tumbling allows for fewer wrinkles.
- A load can be too small. Just a few small pieces will not tumble properly. They will take longer to dry and they may be wrinkled. For small loads, add a couple of large towels or non lint shedding items to aid in tumbling.
- The following illustrations show the ideal load sizes for fabrics. The average load will fill the cylinder one third to half full when wet.

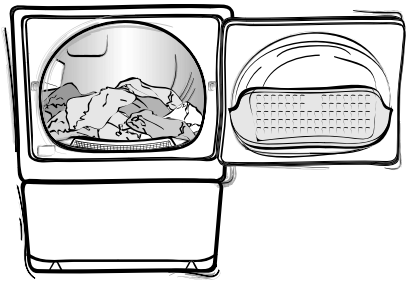

DRY2031N

Cylinder with wet linens and cottons

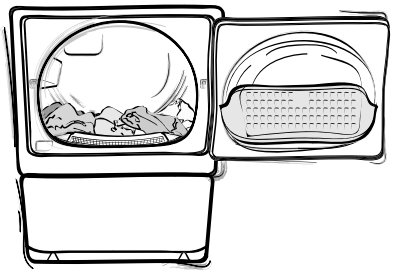

DRY2032N

Cylinder with wet permanent press items

Drying Special Items

Type of Load	Special Instructions
Bedspreads	• Choose heat for fabric. • Dry one double or two single spreads. • Chenille and tufted spreads will shed lint and should be dried by themselves. • New spreads will contain loose lint. Tumble on NO HEAT Fabric Selector setting before washing to remove loose lint. • Dry completely.
Blankets	
Electric	• Choose DELICATE or NO HEAT Fabric Selector setting. • If drying items in dryer is recommended by the manufacturer, dry as for wool. • Do not stretch the blanket because of the wiring. • Some electric blankets may have an insulation on the thermostats or on the wiring which will not withstand dryer heat. Do not dryer dry unless the blanket manufacturer says it can be done.
Synthetic Fibers	• Choose DELICATE or NO HEAT Fabric Selector setting. • Some blankets are fluffy and will shed lint. Tumble on NO HEAT Fabric Selector setting before washing to remove loose lint. • Dry in dryer until just dry. • Clean lint filter half way through drying cycle.
Thermal Cotton	• Choose AUTOMATIC REGULAR/DELICATE cycle.
Wool	• Agitation and tumbling contribute to the shrinkage and felting of wool. Follow blanket manufacturer's instructions for proper care. • Use approximately five dry bath towels and place them between folds in blanket to lessen the tumbling. • Set dryer for 20 minutes on the TIME DRY cycle. Use REGULAR Fabric Selector setting. Check blanket when timer reaches 10. Wool blankets must be removed from the dryer when damp. • Stretch item gently to shape and finish drying in a flat position.
Curtains	
Cotton	• Choose AUTOMATIC REGULAR/DELICATE or TIME DRY cycle. • Remove damp items for ironing or dry completely and then steam iron.
Fiberglass	• DO NOT dry in the dryer unless recommended by the manufacturer. • Fiberglass may shred. Particles may remain in the dryer and rub off on the next load. • "Beta" fiberglass may be dryer dried if recommended by the manufacturer.
Synthetic Fibers	• Choose DELICATE or NO HEAT Fabric Selector settings. • Allow room for tumbling to prevent wrinkling. • Delicate or sheer curtains must be dried by themselves so they will not be snagged by hooks or crushed by other clothes in the load. • Some sheer curtains are heat sensitive. Dry 10 minutes only, plus the cool down period. Remove from dryer immediately and hang. • If the dryer has been heated from a previous load, the NO HEAT Fabric Selector setting may be sufficient.
Denim, Corduroy	• Choose AUTOMATIC REGULAR/DELICATES cycle. • Dry completely and remove from dryer when seams are slightly wet to minimize shrinkage.

Type of Load	Special Instructions
Draperies	• Remove hooks and weights before washing. • Choose heat for fabric and allow space in the dryer for tumbling. • Some draperies may be removed when slightly damp and hung immediately. • Lined draperies should be dry-cleaned because they have a tendency to pucker.
Knit Articles	Knit fabrics are usually manufactured under tension (stretching). Cotton knits especially may relax or draw together if every bit of moisture is removed from them. It is best to take them out of the dryer with a trace of moisture remaining, then stretch to shape. If items shrink from overdrying, rewet them and dry properly.
Cottons	• Choose AUTOMATIC REGULAR/DELICATE or TIME DRY cycle. • Remove slightly damp to minimize ironing. • Reshape, smooth seams and pockets, etc.
Synthetic Fibers	• Choose AUTOMATIC REGULAR/DELICATE or AUTOMATIC PERMANENT PRESS/KNITS cycle. • Turn inside out to prevent pilling. • Dry sweaters only with similar fabrics because they are lint receivers. • Make sure the load is large enough for tumbling. • Dry completely and remove from dryer immediately to minimize wrinkling.
Wool	• Choose DELICATE or NO HEAT Fabric Selector setting. • For wool labeled "machine washable," follow manufacturer's directions. For other wool, use wool blanket method. • Do not dryer dry loosely knit wool or hand knits. • Dry flat and stretch to shape from a pattern drawn before washing.
Lingerie	
Cotton	• Choose AUTOMATIC REGULAR/DELICATE cycle.
Elastic	• Elastic may be dried as for fabric. • Do not overdry.
Foam Rubber (Bras, bathing suits, sun suits, etc.)	• DO NOT dry foam rubber items in the dryer with heat. Fire may result. Use NO HEAT Fabric Selector setting only.
Spandex	• Choose DELICATE or NO HEAT Fabric Selector setting. • Do not overdry.
Stretch Fabrics	• Choose heat for the most delicate fiber. • Dry completely as stretch fabrics will stretch into shape. • Avoid drying with lint shedding fabrics.
Synthetic Fibers	• Choose TIME DRY cycle. Use DELICATE Fabric Selector setting. • Some sheer fabrics, especially sheer knits, can be heat sensitive. Dry until just dry (about 10 minutes) and remove from dryer immediately. • Sheer fabrics should not be washed and dried with garments containing hooks or zippers. • Manufactured fabrics will create static electricity if overdried. • Use fabric softener and avoid overdrying.

continued

Type of Load	Special Instructions
Mattress Pads	• Read and carefully follow the fabric care instructions supplied by the mattress pad manufacturer. • Some mattress pads made of synthetic fibers are very heat sensitive. These pads can be flammable if over-heated or over-dried. To avoid a fire hazard do not over-dry mattress pads. • Remove mattress pads from the dryer while they are still damp.
Pillows	
Feather and Down-Filled	• Ticking must be strong and seams secure. • After washing, shake pillow to fluff feathers. • Dry one large or two smaller pillows. Use TIME DRY cycle. Use DELICATE or PERM PRESS Fabric Selector setting. • Shake and reposition pillows several times during drying. • Pillows must be dry in the center to prevent mildew. • Drying may take two hours or longer. Reset dryer timer if necessary.
Fiber-Filled (polyester)	• Follow manufacturer's directions.
Foam Rubber	• Do not dry in the dryer.
Quilts	• Choose heat and cycle for fabric. • Old quilts may be too fragile to machine wash or dry. • Quilts filled with cotton may become lumpy. • Remove from dryer slightly damp and stretch gently to shape. Quilted articles may shrink if overdried.
Rugs	
Cotton With Cotton Backing	• Choose AUTOMATIC REGULAR/DELICATE or TIME DRY cycle. • Dry one large or several small rugs. For one small rug, add towels.
Rubber-Backed	• Heat tends to deteriorate many types of rubber. • Some types of rubber-like materials are flammable under certain conditions. DO NOT dry foam rubber and rubber-like materials with heat. Use NO HEAT Fabric Selector setting only.
Synthetic Fibers	• Choose DELICATE or NO HEAT Fabric Selector setting. • Follow manufacturer's suggestions. • Some rugs are heat sensitive and should be removed from the dryer when damp, or dried with no heat.
Slip Covers	• Choose heat for fabric. • Close zippers. • Dry one couch cover, two chair covers or five or six pillow covers at one time. • Remove from dryer when slightly damp. • Press pleats, if necessary, and replace on furniture immediately. • Stretch fabrics and knits should be dried completely so they will fit snug when replaced on furniture.
Stuffed Animals and Toys	• Make sure the filling and covering can be dryer dried. • Cotton filling may become lumpy. • Protect glass eyes by covering with a stocking or tie toy into a pillowcase. • Choose heat for most sensitive fiber. • Dry enough clothes in the load for good tumbling. DO NOT dry toys stuffed with foam rubber or kapok in the dryer with heat. • Use no HEAT Fabric Selector setting only.
Tennis Shoes	• Choose DELICATE or NO HEAT Fabric Selector setting. • Use a drying rack or tumble with at least four old bath towels.

Operating Your Dryer

WARNING

To reduce the risk of fire, electric shock, serious injury or death to persons, read the Safety Information section before operating the dryer.

W520

Available Drying Cycles

NOTE: Use the automatic cycles for drying items that can be dried with heat. These cycles automatically dry loads to the dryness level selected.

MAX DRY will dry very small loads and some heavy items, such as blue jeans, but will overdry lightweight items, such as sheets and shirts. Overdrying can cause wrinkling, shrinking, excessive lint conditions, and will use more energy than necessary.

MORE DRY will dry medium sized loads.

LESS DRY, which uses the least energy, will dry large loads and lightweight items, such as sheets and shirts, but might leave other items, such as denim and heavy bath towels, more damp.

To increase energy savings and to make sure loads are dried without overdrying, set your loads on LESS DRY. If items are damp at the end of a cycle, the timer knob needs to be set closer to the MORE DRY setting the next time these loads are dried. If items are overdry at the end of a cycle, the timer knob should be set closer to COOL DOWN or COOL TUMBLE when these loads are dried again. Remember the settings that work best to get ideal drying results.

The COOL DOWN and COOL TUMBLE period at the end of each cycle provides items a chance to tumble with no heat and cool down to room temperature. This prevents wrinkles from setting if items cannot be cared for immediately.

NOTE: The timer knob will not advance as quickly in the AUTOMATIC cycles as it does in the TIME DRY cycle. The time it takes for the timer to advance depends on the type and size of the load being dried.

The ENERGY SAVER settings, marked with a dot (•), show which settings will use the least energy and will leave items damp for easier ironing.

Automatic Regular/Delicate Cycle

Use for sturdy items like play or work clothes and also for delicate items. The type of heat is determined by choosing the proper **Fabric Selector** option. There are three settings in the AUTOMATIC REGULAR/DELICATE cycle — MAX DRY, MORE DRY, and LESS DRY.

Time Dry Cycle

This cycle will operate dryer for up to 75 minutes. Cottons and heavyweight items dry best between 50 and 75 minutes, and lightweight items dry best between 20 and 40 minutes.

Automatic Wrinkle Out Cycle (available on select models only)

Use this for items that are slightly wrinkled after sitting in a dryer or laundry basket overnight. The cycle has a short heat setting followed by a five minute COOL DOWN or COOL TUMBLE.

Automatic Permanent Press/Knits Cycle

Use for permanent press items and synthetics. The type of heat is determined by selecting the proper **Fabric Selector** option. There are two settings in the AUTOMATIC PERMANENT PRESS/KNITS cycle — MORE DRY and LESS DRY.

To Dry Clothes

IMPORTANT: Refer to the INSTALLATION INSTRUCTIONS before using dryer.

IMPORTANT: Before using dryer for the first time, use an all-purpose cleaner or a detergent and water solution and a damp cloth to remove shipping dust from inside of dryer drum.

1. Sort items into separate loads.

IMPORTANT: Remove all sharp objects from laundry to avoid tears and rips to items during normal machine operation.

2. Remove lint filter cover, clean lint filter and replace cover.

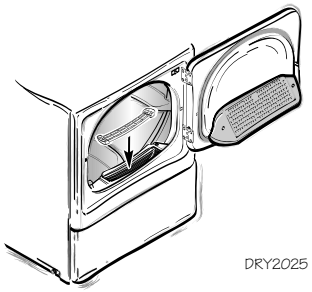

3. Add clothes loosely into dryer drum. Add fabric softener sheet, if desired.

NOTE: To avoid damage to dryer, do not use more than one fabric softener sheet per load.

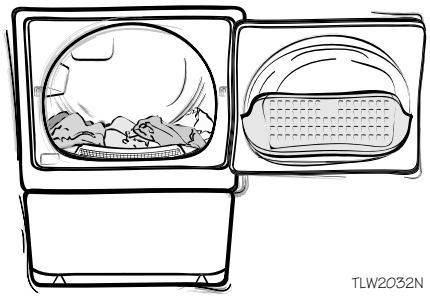

4. Close loading door. Dryer will not operate with the door open.

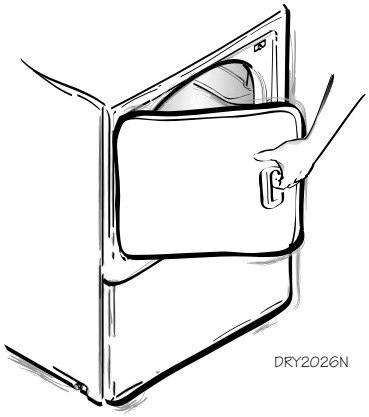

5. Select Fabric Selector (available settings vary by model). Follow garment manufacturer's care labels for recommended temperature settings.

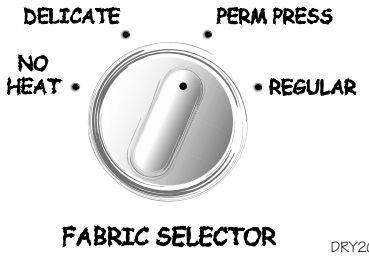

6. Select optional EXTEND TUMBLE (available on select models) setting to continue tumbling items at no heat. This prevents wrinkling when garments cannot be removed from the dryer immediately. By pressing the EXTEND TUMBLE button to "ON," the AUTOMATIC REGULAR/DELICATE and AUTOMATIC PERMANENT PRESS/KNITS cycles will tumble an additional 40 minutes.

7. Select timer setting in cycle desired. These cycles control the drying time.

The ENERGY SAVER settings, marked with a dot (•), show which dryer settings will use the least energy and will leave items damp for easier ironing.

8. Push timer knob in to start dryer.

NOTE: To stop dryer at any time, open the door or turn timer knob to an OFF position. To restart dryer, close door, reset timer if necessary, and push in the timer knob.

End of Cycle Signal (available on select models only)

The volume of the signal tone may be set on OFF, LOUD or between the two selections. If a volume level is selected, the signal will let you know when the cycle is done. The signal will stop when the door is opened, or when the timer is advanced to an OFF position.

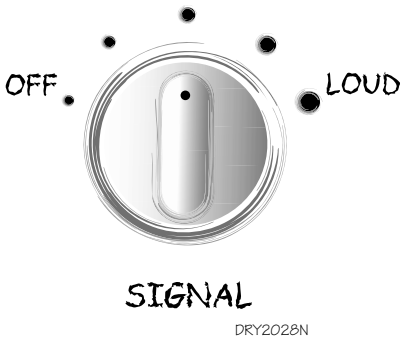

NOTE: The signal will come on every 10 minutes when the optional EXTEND TUMBLE **setting is selected.**

Optional Drying Rack

A drying rack, Part No. D512082, is available at extra cost through your Factory Authorized Service Center.

The drying rack can be used for no-tumble drying of articles such as tennis shoes, sweaters, stuffed toys or other delicate items.

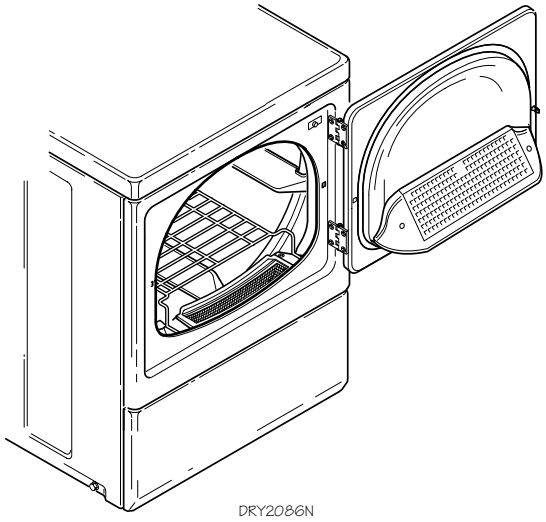

Clothing Care Labels

The symbols below appear on many clothing care labels. Following the instructions on each label will help ensure the best laundry results.

WASH

Machine Wash Cycle

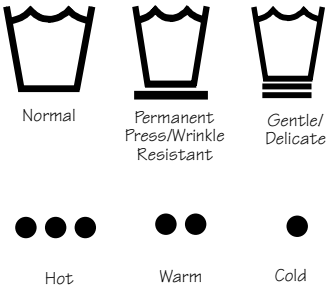

Warning Signs

BLEACH

Bleach Symbols

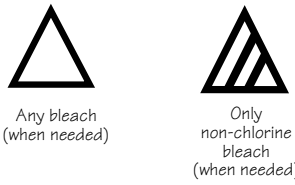

Warning Signs

IRON

Iron - Dry or Steam

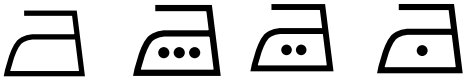

Warning Signs

DRY

Tumble Dry Cycle

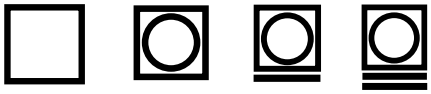

Heat Setting

Special Instructions

Warning Signs

DRYCLEAN

Dryclean

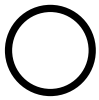

Warning Signs

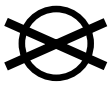

Maintenance

Lubrication

All moving parts are sealed in a permanent supply of lubricant or are equipped with oilless bearings. Additional lubrication will not be necessary.

Care of Your Dryer

WARNING

To reduce the risk of an electric shock, serious injury or death, disconnect the electrical service to the dryer before cleaning the interior.

W132

Dryer Interior

Wipe the surfaces using a soft cloth and household cleaner or a non-abrasive paste of powdered laundry detergent and hot water, followed by a short heat cycle with a load of rags.

To remove crayon or ball point ink off the dryer drum, put the heat on high and use old rags in the dryer to absorb the crayon or ink. If unsuccessful, contact the appliance dealer. DO NOT use any chemicals in the dryer.

IMPORTANT: The use of chlorine bleach for removing any discolorations should be avoided because bleach could damage the finish.

Cabinet

Wipe the dryer cabinet as needed. If detergent, bleach or other washing products have been spilled on the dryer, wipe immediately. Some products will cause permanent damage if spilled on the cabinet.

Control Panel

Use only a damp or sudsy cloth for cleaning the control panel. Some spray pretreat products may harm the finish on the control panel.

NOTE: The wiring diagram is located inside the control panel.

Exhaust System

WARNING

To reduce the risk of electric shock, disconnect the electrical service to the dryer before cleaning.

W043

The exhaust duct should be inspected after one year of use and cleaned if necessary. Inspect and clean exhaust duct every one to two years as required thereafter.

The weather hood should be checked frequently to make sure the dampers move freely, dampers are not pushed in and that nothing has been set against them.

Keep dryer area clear and free from combustible materials, gasoline and other flammable vapors and liquids.

Do not obstruct the flow of combustion and ventilation air.

NOTE: Verify proper operation after servicing.

Motor Overload Protector

The dryer's motor overload protector stops the motor automatically in the event of an overload. After cooling, the overload protector will reset itself. Dryer can be restarted by pushing the timer knob in. If overload protector cycles again, remove the dryer from use and call the service person to correct the problem.

Lint Filter

The lint filter is located at the front of the dryer in the lower part of the door opening.

CLEAN THE LINT FILTER BEFORE DRYING EACH LOAD. Remove lint filter cover, clean lint filter and replace cover. Annually remove lint filter and screw to vacuum the duct under it.

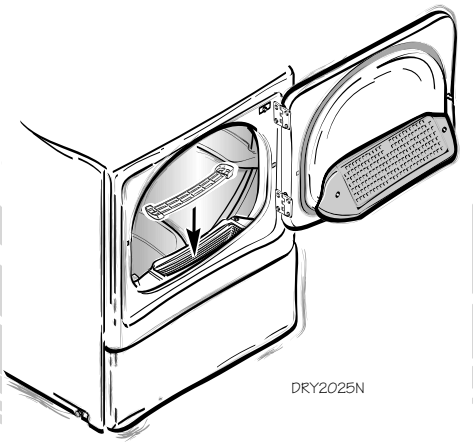

Troubleshooting

Try these troubleshooting tips before making a service call – You may save time and money!

Dryer Symptom	Possible Cause/Solution
Dryer won't start	• For dryers equipped with a power cord, make sure the power cord is plugged all the way into the electrical outlet. • Make sure loading door is closed. • Push timer knob in to start dryer. • Make sure the laundry room fuse(s) isn't blown or loose, or circuit breakers aren't open. The dryer itself does not have an electrical fuse. An electric dryer has an electrical circuit with two fuses. • Check if motor overload protector has cycled. Wait 10 minutes and try again.
Dryer won't heat	• Make sure timer is not in COOL DOWN, COOL TUMBLE or EXTENDED TUMBLE settings or that Fabric Selector is not set at NO HEAT. • Electric dryers only – Some homes may have two fuses or circuit breakers for an electric dryer; both fuses or circuit breakers should be checked. Make sure the laundry room fuse(s) isn't blown or loose, or that the circuit breakers aren't open. The electric dryer itself does not have an electrical fuse. • Gas dryer only – Make sure equipment and main gas line valve is turned on. • Check exhaust duct to outside to see if it is kinked, blocked or needs cleaning. • Check weather hood to make sure flapper moves freely, has not been pushed in or has not been blocked.
Dryer doesn't dry clothes satisfactorily	• Check exhaust duct to outside to see if it is kinked, blocked or needs cleaning. • Check weather hood to make sure flapper moves freely, has not been pushed in or has not been blocked. • Automatic cycle – Adjust to MAX, MORE or LESS DRY setting. • Timed cycle – Allow more or less time. • Clean the lint filter. • Make sure the load isn't too small. Small loads may not tumble properly or dry evenly. • Check load being dried. Heavy items dried with lightweight items will not dry as quickly as the rest of the load. Refer to Sort section for proper sorting information.
Dryer is noisy	• Check dryer for foreign objects (nails, coins, bobby pins, metal, plastic toys, etc.). Remove items from dryer. • Make sure dryer is level. Uneven leveling can cause vibration. • Normal operating sounds include the tick of timer advancing, heat source going on and off, and humming of air moving through the dryer and exhaust system.
Cycle advances too slowly	• Automatic cycles advance slower than the Time Dry cycle. When in an Automatic cycle, the time it takes for the timer to advance depends on the type and size of the load being dried. When clothing has more moisture, the timer advances slower than when the clothes are more dry.
Clothes are too wrinkled	• Check heat setting. Overdrying can cause wrinkling. • Check load size. Large loads may not tumble properly and may cause wrinkling.
Clothes have odor	• Check room for odors before drying clothes. Any odor (fried foods, paint, varnish, cleaners, burning wood, etc.) will transfer to clothing as the dryer draws air from the room. Ventilate room before drying clothes.

Contact Information

If service is required, contact the nearest Factory Authorized Service Center. To find the nearest service center, visit us online at www.speedqueen.com.

If you are unable to locate an authorized service center or are unsatisfied with the service performed on your dryer, contact:

Speed Queen
Shepard Street
P.O. Box 990
Ripon, Wisconsin 54971
www.speedqueen.com
Phone: (920)748-3121

Date Purchased_____

Model Number_____

Serial Number_____

When calling or writing about your dryer, PLEASE GIVE THE MODEL AND SERIAL NUMBERS. The model and serial numbers are located on the nameplate. The nameplate will be in the location shown in the illustration below. Please include a copy of your bill of sale and any service receipts you have.

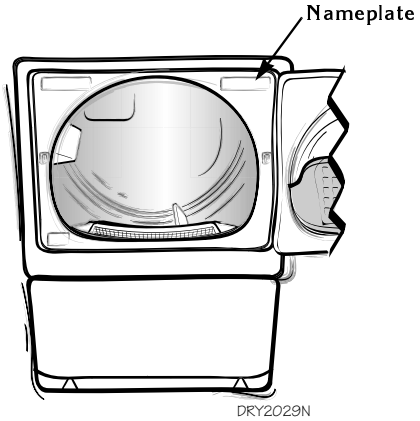

WARNING

To reduce the risk of serious injury or death, DO NOT repair or replace any part of the dryer or attempt any servicing unless specifically recommended in the user-maintenance instructions or in published user-repair instructions that you understand and have the skills to carry out.

W133

If replacement parts are required, contact the source from which you purchase your dryer, or visit us online at www.speedqueen.com.